❖

❖

❖

	0.016

❖

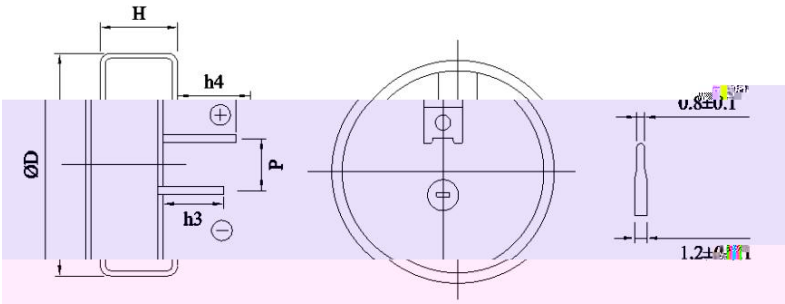

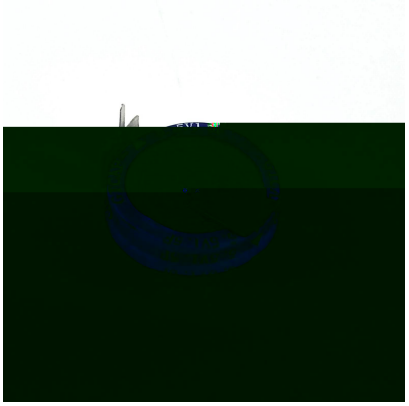

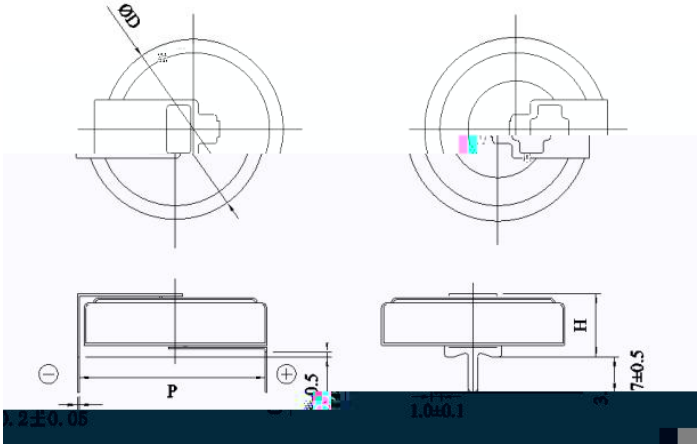
ØD
P
H
1.0±0.1

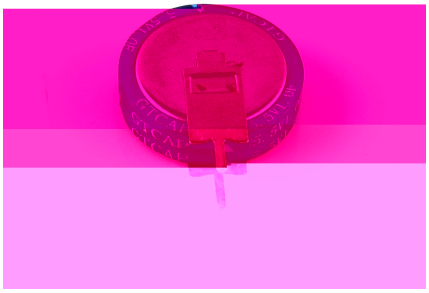

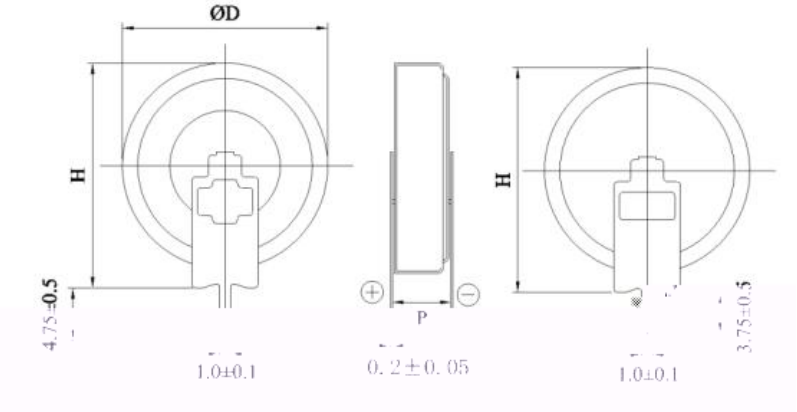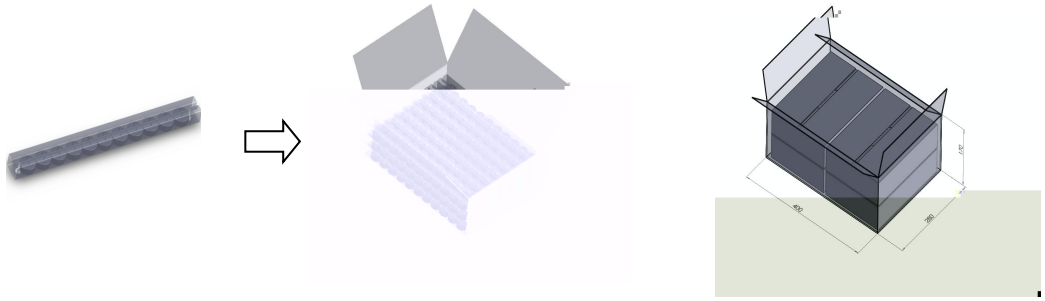
ØD
H
P
1.0±0.1
0.2±0.05
1.0±0.1